PRODUCT SPECIFICATIONS / INFO

688-W

UPC Code: 07847779196

Country of Origin: Please Contact Customer Service

Description
1 GANG RECESSED SINGLE RECEPTACLE, 2-POLE, 3-WIRE, 15A-125V, NEMA 5-15R RESIDENTIAL GRADE. WITH CLOCK HANGER HOOK SUPPLIED. WHITE

Color: White

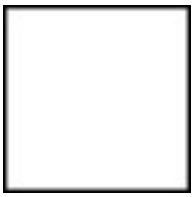

NEMA: 5-15R

Product Features

Grounding:	Grounding
Feature:	Clock
Amperage:	15 Amp
Voltage:	125 Volt
NEMA:	5-15R
Pole:	2
Wire:	3
Termination:	Side
Face Material:	Thermoplastic
Body Material:	Thermoplastic
Strap Material:	Steel
Color:	White
Standards and Certifications:	UL/CSA
Warranty:	2 Year Limited

Wiring Diagram

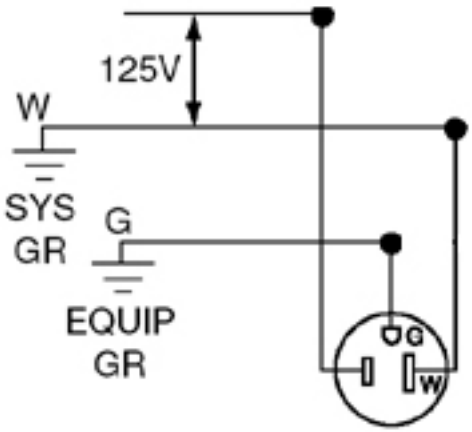

5-15R