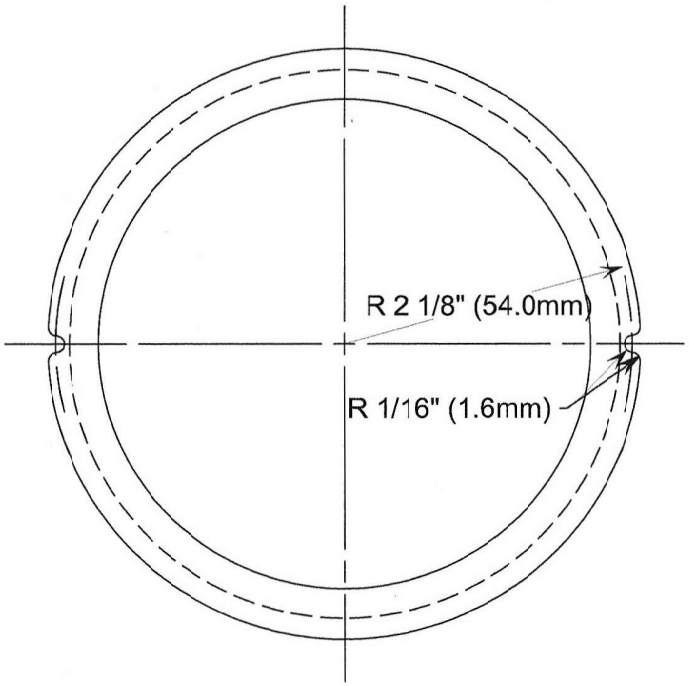

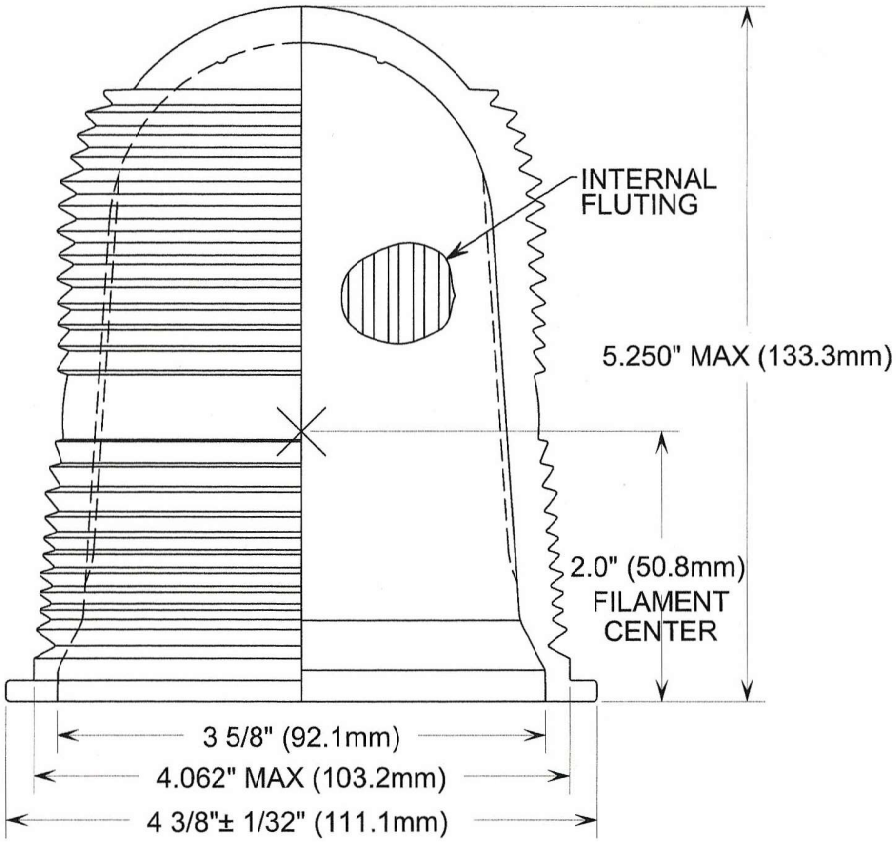

No.	Status	Date	App'd
5			
4			
3			
2			
1			

Scale: 3/4

Tolerances Unless Noted

Fraction: +/- 1/32
.XX: +/- .03
.XXX: +/- .015
Angles: +/- 2 degree

Gillinder Brothers, Inc.
Erie & Liberty Streets
P.O. Box 1007
Port Jervis, NY 12771

Mat'l

Drawn by: JSD

Date: 2/5/07

GB# 6625 AIRPORT RUNWAY
94 INTERNAL PRISM

6625GLAS