LED SLIM AREA LIGHTS

AR SERIES, GENERATION 2

Fixture shown with Slipfitter Knuckle

60W Model

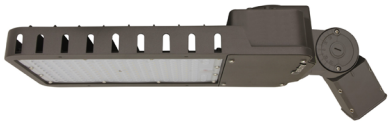

Fixture shown with Trunnion Swivel

100-140W Model

Fixture shown with Straight Arm

210-280W Model

DIMENSIONS:

Please see page 3 and 4 for dimension drawings.

PRODUCT DESCRIPTION:

The LED Slim Area Lights deliver class-leading efficacy in a lightweight design that can be effortlessly applied to new and retrofit outdoor projects. Offered in lumen packages ranging from 7,700lm to over 35,000lm, the AR Series achieves up to 130 lumens per watt while providing significant long-term energy and maintenance cost savings.

FEATURES:

- Replaces up to 750W MH/HPS equivalent
- Universal 120-277V dimming driver standard, 347-480V available
- Dusk-to-dawn and occupancy sensor capability
- Greater than 100,000 hour L90 lifetime at TM21 standards at 25°C
- 5-year limited warranty
- 10kV surge suppression standard
- Comes with 41" 18/3 SO cord

MOUNTING:

- 7.5" Straight Arm[1]
- Trunnion Swivel
- 2-3/8" Slipfitter Knuckle

CONTROLS:

PC Option: NEMA standard C136.41 3-pin twist lock receptacle for use with NEMA twist lock photocell. **The photocell is sold separately.**

Photo/Motion Sensor: The FSP-211 uses passive infrared (PIR) sensing technology to react to changes in infrared energy (i.e. moving body heat) within the coverage area. This slim, low-profile sensor is designed for installation inside the bottom of a light fixture body and is ideal for outdoor enviroments. The sensor operates at 120V/230V-240V and single phase 277V. The motion sensor is fully adjustable with high and low dimmed light level options with optional dusk to dawn control. Sensor can be combined with various lenses to operate at mounting heights from 8' to 40'. Please refer to page 4 for the sensor's factory default settings. Factory settings can be adjusted via the FSIR-100, a wireless configuration tool. **Note that the sensor comes with photocell setting disabled and the FSIR-100 must be purchased if photocell functionality is desired.**

Please refer to the FSP-211 Supplementary Datasheet for more product information.

MODEL SELECTION — Typical order example: AR60UT5-50BK

AR				-				
FAMILY	**NOMINAL WATTAGE**	**VOLTAGE**	**DISTRIBUTION**	**-**	**CCT**	**FINISH**	**MOUNTING**	**OPTIONS**
AR= Area Light	**60=** 60W,250W MH/HPS equivalent **100=** 100W, 400W MH/HPS equivalent **140=** 140W, 400W MH/HPS equivalent **210=** 210W, 750W MH/HPS equivalent **280=** 280W, 750W MH/HPS equivalent	**U=** 120-277V **H=** 347-480V	**T2=** Type II **T3=** Type III **T4=** Type IV **T5=** Type V	-	**40=** 4000K **50=** 5000K	**B=** Bronze *Contact Maxlite for additional finishes*	**A=** Straight Arm[1] **K=** 2-3/8" Slipfitter Knuckle **T=** Trunnion Swivel	**(OMIT)=** None **MS=** Daylight/Motion Sensor **RPC=** NEMA 3-pin receptacle (NEMA twist lock Photocell sold separately)

w

NOTES:

1. The straight arm mounting fits square poles. For compatibility with round poles, combine the straight arm mounting with a round pole adaptor. See adaptor selection table on page 3.

SPECIFICATIONS:

ITEM	SPECIFICATION			60 WATT	100 WATT	140 WATT	210 WATT	280 WATT
				DETAILS				
GENERAL PERFORMANCE	Input Power (W)			60W	100W	140W	210W	280W
	Type II	4000K	Lumens	7846	12420	17014	25633	34547
			BUG Rating	B3-U2-G3	B3-U2-G3	B3-U2-G3	B3-U2-G3	B3-U2-G3
		5000K	Lumens	7860	12675	17922	26756	35886
			BUG Rating	B3-U2-G3	B3-U2-G3	B3-U2-G3	B3-U2-G3	B3-U2-G3
	Type III	4000K	Lumens	7900	12420	17014	25663	34547
			BUG Rating	B3-U2-G3	B3-U2-G3	B3-U2-G3	B3-U2-G3	B3-U2-G3
		5000K	Lumens	7900	12675	17922	26756	35886
			BUG Rating	B3-U2-G3	B3-U2-G3	B3-U2-G3	B3-U2-G3	B3-U2-G3
	Type IV	4000K	Lumens	7615	12421	17015	25663	34548
			BUG Rating	B3-U2-G3	B3-U2-G3	B3-U2-G3	B4-U3-G4	B5-U3-G5
		5000K	Lumens	7699	12675	17922	26756	35886
			BUG Rating	B3-U2-G3	B3-U2-G3	B3-U2-G3	B4-U3-G4	B5-U3-G5
	Type V	4000K	Lumens	7787	12420	17014	25663	34547
			BUG Rating	B3-U2-G1	B3-U2-G1	B3-U2-G1	B3-U2-G1	B3-U2-G1
		5000K	Lumens	7860	12675	17922	26756	35886
			BUG Rating	B3-U2-G1	B3-U2-G1	B3-U2-G1	B3-U2-G1	B3-U2-G1
	Efficacy (lm/W)			up to 130 lm/W				
	CRI			> 70				
	Lumen Maintenance (L90, TM21 @ 25°C)			> 100,000 hours				
	Color Temperature			4000K and 5000K available				
	Power Factor			> 0.9				
	THD			< 16%				
ELECTRICAL	Input Voltage Range			120-277V standard, 347-480V available				
	Housing			Die-cast aluminum				
	Lens			Polycarbonate lens				
PHYSICAL	Housing			2-3/8" Slipfitter, Straight Arm, Trunnion Swivel				
	Lens			Type II, Type III, Type IV, Type V - Frosted lens				
	Mounting			Slip Fitter, Straight Arm, Trunnion Mount options				
	Dimensions (Module)			15.9"x8.7"x3.4"	16.9" x 10.3" x 3.4"		16.6" x 15.0" x 3.5"	
	Weight			8.5 lbs	11.8 lbs	12.5 lbs	22.5 lbs	23.9 lbs
	EPA (sq. ft)			0.43	0.43	0.43	0.49	0.49
	Operating Temperature			-31°F to 131°F (-35°C to 55°C)				
QUALIFICATIONS	Qualifications			cULus, supports T24 compliance				
	Material Usage			RoHS compliant; no mercury				
	Environment			Outdoor, Wet location				
	Warranty			5 years				

ACCESSORIES:

ORDER CODE	MODEL	DESCRIPTION
107846	AR-MAL-4RPA	4" Round Pole Adaptor for AR-MAL Series, to be used with straight arm
107847	AR-MAL-5RPA	5" Round Pole Adaptor for AR-MAL Series, to be used with straight arm
72055	6390LBK	NEMA Twist-Lock Photo Control 120V-277V
1408292	6394LL	NEMA Twist-Lock Photo Control 347V-480V

DIMENSIONS:

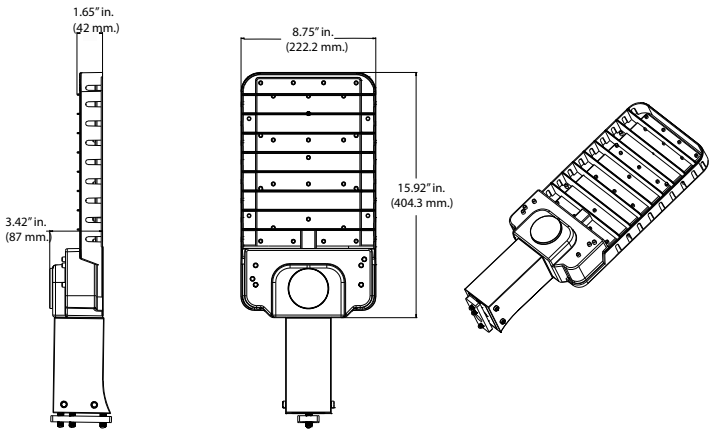

60W Model

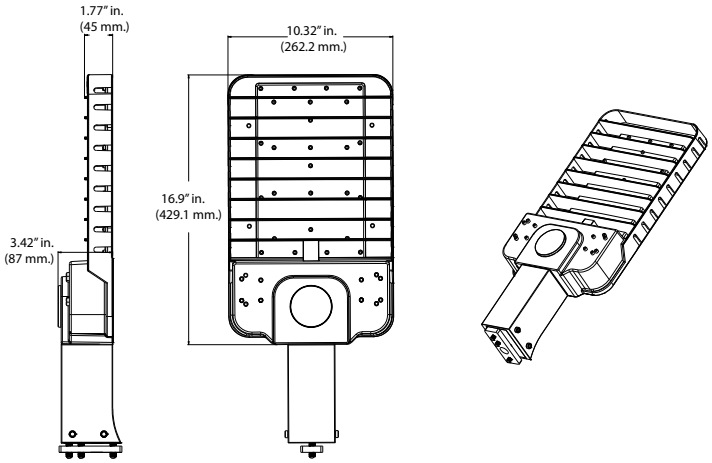

100-140W Model

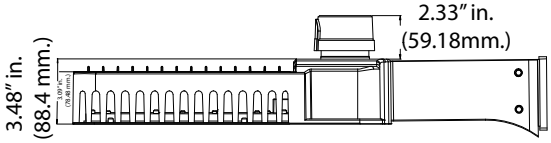

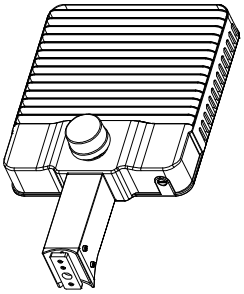

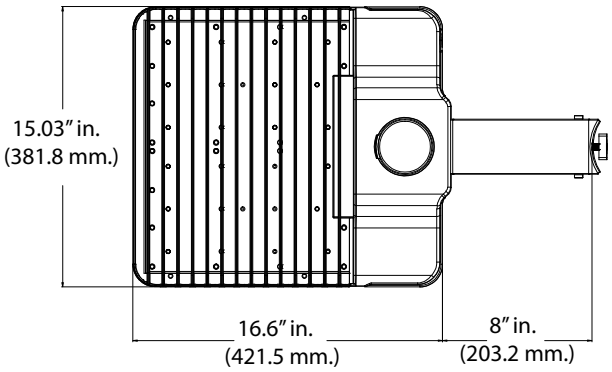

210-280W Model

MOUNTING DIMENSIONS:

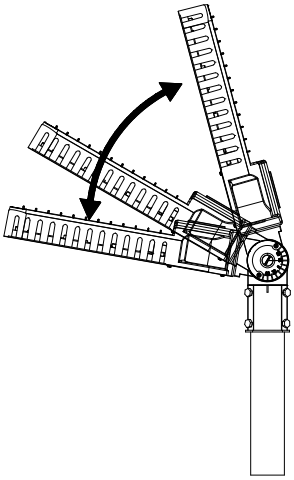

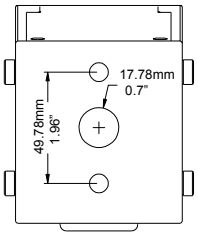

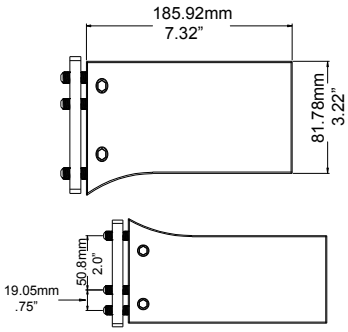

Straight Arm Pole

Slip Fitter
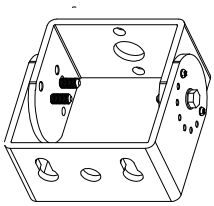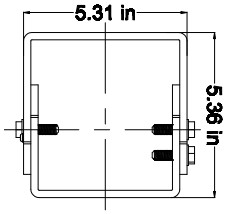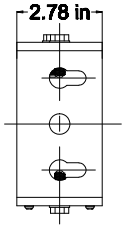
Trunnion